NATO OTAN

NATO STANDARDIZATION AGENCY
AGENCE OTAN DE NORMALISATION

NSA

8 May 2009 NSA/0486(2009)-JAIS/4575

See NAFAG AC/224(JCGISR) STANAG distribution

STANAG 4575 (EDITION 3) – NATO ADVANCED DATA STORAGE INTERFACE (NADSI)

Reference: AC/224(JCGISR-ASIISG)DS(2008)0003 (INV)

1. The enclosed NATO Standardization Agreement, which has been ratified by nations as reflected in the NATO Standardization Document Database (NSDD), is promulgated herewith.

2. The reference listed above is to be destroyed in accordance with local document destruction procedures.

3. The Nato Air Force Armaments Group AC/224(JCGISR) considers this an editorial edition of the STANAG; previous ratifying references and implementation details are deemed to be valid.

Juan A. MORENO
Vice Admiral, ESP(N)
Director, NATO Standardization Agency

Enclosure:
STANAG 4575 (Edition 3)

NATO Standardization Agency – Agence OTAN de normalisation
B-1110 Brussels, Belgium Internet site: http://nsa.nato.int
E-mail: g.thibaut@hq.nato.int – Tel 32.2.707.4288 – Fax 32.2.707.4103

STANAG 4575
(Edition 3)

NORTH ATLANTIC TREATY ORGANISATION
(NATO)

NATO STANDARDIZATION AGENCY
(NSA)

STANDARDIZATION AGREEMENT
(STANAG)

SUBJECT: NATO Advanced Data Storage Interface (NADSI)

Promulgated on 8 May 2009

Juan A. MORENO
Vice Admiral, ESP(N)
Director, NATO Standardization Agency

RECORD OF AMENDMENTS

No.	Reference/Date of amendment	Date entered	Signature

EXPLANATORY NOTES

AGREEMENT

1. This STANAG is promulgated by the Director NATO Standardization Agency under the authority vested in him by the NATO Standardization Organisation Charter.

2. No departure may be made from the agreement without informing the tasking authority in the form of a reservation. Nations may propose changes at any time to the tasking authority where they will be processed in the same manner as the original agreement.

3. Ratifying nations have agreed that national orders, manuals and instructions implementing this STANAG will include a reference to the STANAG number for purposes of identification.

RATIFICATION, IMPLEMENTATION AND RESERVATIONS

4. Ratification, implementation and reservation details are available on request or through the NSAwebsites (internet http://nsa.nato.int; NATO Secure WAN http://nsa.hq.nato.int).

FEEDBACK

5. Any comments concerning this publication should be directed to NATO/NSA – Bvd Leopold III - 1110 Brussels - Belgium.

NATO STANDARDIZATION AGREEMENT (STANAG)

NATO ADVANCED DATA STORAGE INTERFACE (NADSI)

Annexes: A. TERMS AND DEFINITIONS
B. LOGICAL INTERFACE
C. PHYSICAL AND POWER INTERFACE DEFINITION

The following Standardization Agreements (STANAGs), Military Standards (MIL-STDs), International Telecommunication Union (ITU) Recommendations and International Standards (ISs) contain provisions which, through references in this text, constitute provisions of this STANAG. At the time of publication, the editions indicated were valid. All Recommendations and Standards are subject to revision, and parties to agreements based on this STANAG are encouraged to investigate the possibility of applying the most recent editions of the STANAGs, MIL-STDs, ITU Recommendations and ISs listed below. NATO maintains registers of currently valid STANAGs.

Referenced Documents:

ISO/IEC 4873	Information technology – ISO 8-bit code for information interchange – Structure and rules for implementation
ISO/IEC 7498-1	Information technology - Open systems interconnection - Basic reference model: The basic model
ISO/IEC 10646-1:1993 Amd 2: 1996	Information technology – Universal Multiple-Octet Coded Character Set (UCS) – Part 1: Architecture and Basic Multilingual Plane – Amendment 2: UCS Transformation Format 8 (UTF-8)
ANSI/NCITS TR19-1998	Fibre Channel - Private Loop SCSI Direct Attach (FC-PLDA)
ANSI/NCITS X3.270-1996	Information Technology – SCSI-3 Architecture Model/SAM – Lower Level Interface.
ANSI/NCITS 353-2002	Information Technology - Fibre Channel Physical Interfaces (FC-PI)
ANSI/NCITS 373-2003	Information Technology - Fibre Channel Framing and Signaling Interfaces (FC-FS)

ANSI/NCITS 408-2005	Information Technology – SCSI Primary Commands -3(SPC-3)
ANSI/NCITS 405-2005	Information Technology - SCSI Block Commands 2(SBC-2)
MIL-DTL-24308E	Connectors, electrical, rectangular, non-environmental, miniature, polarized shell, rack and panel, general specification for
MIL-DTL-38999K	Connectors, electrical, circular, miniature, high density, quick disconnect (bayonet, thread, and breech coupling), environmental resistant, removable crimp and hermetic solder contacts, general specification for

Related Documents:

STANAG 4545	NATO Secondary Imagery Format
STANAG 4559	NATO Standard Imagery Library Interface
STANAG 4607	NATO Ground Moving Target Indicator Format
STANAG 4609	NATO Digital Motion Imagery Format
STANAG 7023	Air Reconnaissance Imagery Data Architecture
STANAG 7024	Imagery Air Reconnaissance Cassette Tape Recorder Standard
STANAG 7085	Interoperable Data Links For Imaging Systems
AEDP-3	Advanced Data Storage Technology Memory Systems Sanitization Guide
AEDP-6	NATO Advanced Data Storage Interface (NADSI) Implementation Guide
ANSI X3.270-1996	SCSI-III Architecture Model
ANSI X3.272-1996	Information Technology - Fibre Channel Arbitrated Loop (FC-AL)
ANSI X3.269-1996	Information Technology - Fibre Channel Protocol for SCSI (FCP)

1. AIM

The aim of this agreement is to promote interoperability for the exchange of data among North Atlantic Treaty Organisation (NATO) Intelligence, Surveillance, and Reconnaissance (ISR) Systems. The NATO Advanced Data Storage Interface (NADSI) defines the standard for an interface to allow cross-servicing of ISR platforms by NATO nations' ground stations.

2 AGREEMENT

Participating nations agree to develop ISR recording systems with reference to this STANAG. Nations may propose changes at any time to the control authority where they will be processed in the same manner as the original agreement. Ratifying nations have agreed that national orders, manuals and instructions implementing this STANAG will include a reference to the STANAG number for the purpose of identification.

3. DEFINITIONS

The terms and definitions used in this document are listed in Annex A.

4. GENERAL SECTION

This agreement contains three annexes with associated appendixes. Annex A lists the terms and definitions that apply to this agreement. Annex B contains the details of the NADSI Protocol Interface. Annex C contains the details of the NADSI physical and power interface.

5. DETAILS OF AGREEMENT

The NADSI STANAG defines a multiple layer protocol for the lower levels of the interface channel as defined in the International Standards Organisation - Open Systems Interconnection model (ISO/IEC 7498-1). Additionally, this STANAG is part of the NATO ISR Interoperability Architecture (NIIA) which includes the data format standards STANAG 7023 for primary and STANAG 4545 for secondary imagery. The NADSI standard alone does not guarantee interoperability. Compatibility must also be assured at other protocol layers. Certifiable implementation of the NADSI for support of interoperability is subject to constraints not specified in this STANAG.

6. IMPLEMENTATION OF THE AGREEMENT

This STANAG is implemented by a nation when it has issued instructions that all such equipment procured for its forces will be in accordance with the characteristics detailed in this agreement.

TERMS AND DEFINITIONS

1. Acronyms.

The following acronyms are used for the purpose of this agreement.

AEDP	Allied Engineering Documentation Publication
AGE	Aerospace Ground Equipment
ANSI/NCITS	American National Standards Institute / National Committee for Information Technology Standards
AP	Allied Publication
BCS	ISO Basic Character Set
ISO/IEC	International Organization for Standardization / International Electrotechnical Commission
IU	Interface Unit
NADSI	NATO Advanced Data Storage Interface
NATO	North Atlantic Treaty Organisation
NED	NATO Effective Date
NIIA	NATO ISR Interoperability Architecture
NSA	NATO Standardization Agency
RMM	Removable Memory Module
SCSI	Small Computer System Interface
STANAG	Standardization Agreement
UCS	Universal Multiple – Octet Coded Character Set
0xXX	Hexadecimal representation where “XX” is the hexadecimal code; to distinguish hexadecimal field entries from decimal or BCS.

2. Terms and Definitions.

Basic CharacterSet	A subset of the International Standards Organization Extended Character Set as defined in ISO/IEC 4873 and ISO/IEC 10646-1:1993; Amendment 2:1996.
FC	Fibre Channel
FC-AL	Fibre Channel Arbitrated Loop
FC- PI	Fibre Channel Physical Interface
FC-FS	Fibre Channel Framing and Signaling Interface
FC-PLDA	Fibre Channel Private Loop Direct Attach
Flying Lead	For the NADSI application, a cable that is attached to the ground station at one end and has a NADSI connector on the other. For the NADSI application it connects the NADSI interface to a ground system

Magic Number	An identifier for the directory block. This is a value chosen to support discovery of lost directory entries and directory reconstruction after a fault.
Non-volatile	Memory Media that retains data when power is removed.
Recorder	The entity that includes the input and control interfaces, RMM, and functionality required to properly record data.
Removable	That element or elements of the data recorder that containsMemory Module the stored data and NADS Interface and is easily removed (RMM) for download. This can range from a replaceable subassemblyto the entire recorder, as appropriate
SAM	SCSI Architecture Model
SCSI ULP	Small Computer System Interface Upper Level Protocol
Stored Data	That data stored in the RMM that is required to be transferred to the ground system.

PROTOCOL INTERFACE DEFINITION

1. Structure of the Interface. The interface is defined at three levels. The first level is the electrical and command protocol. This is defined in section 2. The second level of the protocol is the file structure that is defined in section 3. The third level, which is the physical interface defined by the connector, the pin connections, and power provisions, form the remainder of the interface and is defined in Annex C.

1.1 Data Transformation. Any processing performed on the stored data by the recorder (e.g. for the purposes of internal system management, error detection and correction (EDAC), data compression, etc.) shall be removed from the stored data, when the stored data is transferred across the NADSI.

2. Electrical and Command Protocol. This section defines the signaling and protocol requirements for the command and data communications interface to the Advanced Data Storage Interface. The interface is generally based upon Fibre Channel interface standards, using an Arbitrated Loop topology and SCSI Upper Level Protocol (ULP).

2.1 Physical and Signaling. The interface shall comply with FC-PI and FC-FS, with configuration options as specified below.

2.1.1 Transmitter. The interface shall use an electrical transmitter.

2.1.2 Signaling Rate. The maximum transmission signaling rate shall be 2.125 G
If transmitter and receiver maximum signaling rates differ, then the highest
negotiated rate shall be used, in accordance with FC-FS Clause 28, Link
Negotiation.

2.2 Command Protocol. The interface shall conform to the requirements of the Fibre Channel Private Loop SCSI Direct Attach (FC-PLDA, ANSI/NCITS TR19-1998) interoperability, except as defined herein. Table 17 of FC-PLDA specifies a control protocol using a subset of commands, features and parameters defined for the Small Computer System Interface (SCSI-3). Table 17 of FC-PLDA also defines the command feature and parameter usage categories of “Required”, “Allowed”, “Invokable” and “Prohibited” between the SCSI Initiator and Target. These definitions assume that the Target is a magnetic disk drive or equivalent device.

The STANAG 4575 control protocol must support a number of data storage media types. Therefore the usage definitions of FC-PLDA Table 17 have been redefined for STANAG 4575. Only the minimum set of SCSI commands needed to download reconnaissance mission data from a memory cartridge are defined as “Required”. All other FC-PLDA SCSI commands, features and parameters not defined as “Required” for STANAG 4575, are redefined as “Allowed” such that they may be implemented as

appropriate. Table B-1 provides the five “Required” STANAG 4575 SCSI commands and their features and parameter usage definitions. In addition, it is recognized that numerous applications will be required to write to the RMM as well. Commands required to format and/or write to an RMM are not separately defined in this STANAG, but are also among the “Allowed” commands from Table 17 in the FC-PLDA document.

The RMM shall provide Fibre Channel Responder functionality and the NATO ground station shall provide Fibre Channel Originator functionality. The RMM shall also provide SCSI Target functionality and the NATO ground station shall provide SCSI Initiator functionality. When the RMM is directly connected to and powered by the full NADS Interface (such as in a ground-based download device), the RMM shall automatically initialize with the NADSI data/control port active and the NADSI port shall be the priority data and control port. When the RMM is powered by the acquisition platform for data download (such as when installed in an aircraft and connected to a ground-based download device), and the NADSI port initiator (e.g. the port on the ground-based download device) is connected and activated, it shall be possible to transfer the control and data download functions to the NADSI port of the (target) RMM.

2.2.1 Stream devices. Stream devices are not to be used.

2.3 Services.

2.3.1 Encryption. Fibre Channel encryption services shall not be used.

Table B-1; STANAG 4575 "Required" SCSI Commands, Features and Parameters

Feature	*Initiator*	*Target*	*Notes*
INQUIRY	I	R	
Standard INQUIRY data (bytes 0-35)	I	R	
EVPD = 1	I	R	
Vital Product Data page codes:			
0x00 (supported vital product pages)	I	R	
0x80 (unit serial number page)	I	R	
0x81 (implemented operations definition pg)	I	A	
0x82 (BCS implemented operations def pg)	I	A	
0x83 (device identification page)	I	R	
READ (10)	I	R	
DPO = 0	I	A	1
DPO = 1	I	A	1
FUA = 0	I	A	2
FUA = 1	I	A	2
RelAdr = 0	R	R	
RelAdr = 1	P	P	3
READ CAPACITY	I	R	
RelAdr = 0	R	R	
RelAdr = 1	P	P	3
PMI = 0	I	R	
PMI = 1	I	A	
TEST UNIT READY	I	R	
REQUEST SENSE	I	R	

Notes:
1. The Disable Page Out (DPO) bit is associated with a device data caching policy. STANAG 4575 mission storage devices are not required to provide data caching.
2. The Force Unit Access (FUA) bit is associated with whether the device may or may not return the requested Read data from its local cache. STANAG 4575 mission storage devices are not required to provide data caching.
3. Relative Offset is prohibited since this requires the use of linking that is prohibited.
4. All RMMs not supporting Allowed commands shall respond to these commands with an appropriate error response and shall not cease operations.

P = Prohibited: The feature shall not be used between NADSI compliant devices.
R = Required: The feature or parameter value shall be implemented by NADSI compliant devices.
A = Allowed: The feature or parameter may be used between NADSI compliant devices. The initiator determines if an Allowed feature/parameter is supported via a required discovery process or a minimal response by the recipient.
I = Invokable: The feature or parameter may be used between NADSI compliant devices. The recipient shall support "Invokable" features or provide a response that it is not implemented as defined by the appropriate standard.

3. File Structure Definition. This STANAG file system has been developed to enable the downloading of very large sequential files into support workstations. It supports only logically contiguous files in a single directory. The data can be physically organized any way appropriate to the media, including multiple directories, as long as the interface to the NADSI "sees" a single directory of files in contiguous logical addresses. All addresses refer to logical blocks.

3.1 Data Hierarchy. The structures used to define the data stored according to this STANAG have the following relationships (highest to lowest):

3.1.1 Directory. One or more directory blocks of data comprising a list of all Data Files locatable under the guidance of this STANAG. Also contains supporting data that may be of interest to those manipulating the Data Files. The list of files is made up from "File Entries". The Directory shall always start at logical address zero of each directory block.

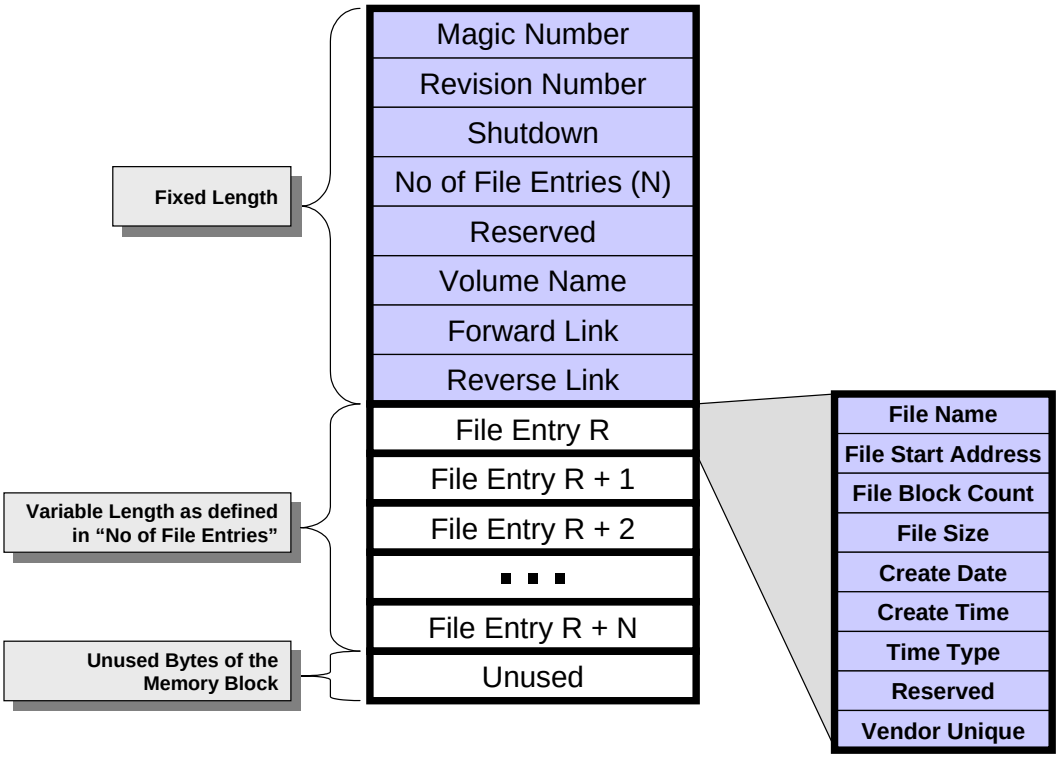

Figure B-1; Directory Block Structure

3.1.2 Directory Block. A memory block containing file entries and other metadata.

3.1.3 File Entry. A fixed length data structure used to describe files. It contains the name, the starting address, the number of blocks of data assigned to the Data File, the total number of bytes contained in the file, and the file's creation date and time. It also contains a reserved field for future growth and a vendor unique field.

3.1.4 Data Files. Data files are comprised of user data, stored in monotonically increasing contiguous logical addresses. Thus if a file starts at logical address X, the next location containing file data must be at the next logical address, X+1, and the next location after that must be at the next logical address, X+2, etc.

3.2 Directory. Name and location information for all files are recorded in a Directory, see Figure B-1. The Directory is composed of one or more directory blocks as shown in Figure B-2 and described in more detail in Table B-2. At least one Directory Block is required and it must be located at SCSI logical block address 1. (Logical block address 0 is defined as a vendor unique area; its contents are not described or controlled by this STANAG.)

Directory Block							
Magic Number	Rev. No	Shut-down	No of File Entries	Reserved	Volume Name	Forward Link	Reverse Link
8	1	1	2	4	32	8	8
64 Byte							

Figure B-2; Directory Block

3.2.1 Directory Fixed Fields. The fixed fields within a directory block are used to name the volume of data, identify the number of entries, and to provide pointers to other addresses that contain additional directory blocks. The forward and backward link fields point forward to the next Directory Block (if any) and back to the preceding Directory Block (if any), respectively. This allows for directory expansion beyond a single block and does not limit the placement of directory information.

3.2.2 Block Size. The media types used to implement this STANAG have varying block size. Some will have blocks as small as 512 bytes, others may have blocks as large as 64K bytes or larger. The block size used by a given media can be determined via the SCSI protocol and is not defined here.

Table B-2; Directory Block Format

Field Name	*Bytes*	*Description*	*Data Type*
Magic Number	8	An identifier for a directory block. The value is BCS "FORTYtwo" (Hex – 0x464F52545974776F)	BCS
Revision Number	1	Revision number of the STANAG complied with by the recording system.	Unsigned Binary
Shutdown	1	Flag, if cleared to a 0x00 indicates that the volume was not properly dismounted, if this value is seen on power-up, it is an indication that the directory chain may be faulty.If set to 0xFF, then file system properly shutdown. This field is only meaningful in the first directory located in logical block 1. Other directory blocks fill with 0xFF.	Unsigned Binary
Number of File Entries	2	Defines the number of file entries that follow, in this block.	Unsigned Binary
Reserved	4	Bytes in this region are reserved for future growth.	Unsigned Binary
VolName	32	Volume name. Fill with all 0x00 for no name and for any unused Volume Name characters.	BCS
Forward Link	8	Block address of the next block containing directory information. Set equal to address of this block if this is the end of the chain.	Unsigned Binary
Reverse Link	8	Block address of the directory block pointing to this block. Set equal to the address of this block if this is the start of the chain.	Unsigned Binary
(N File Entries)	112 *N	One entry for each file. The value of "N" is dependent upon media block size.	See Table B-3
Unused	X	It is possible for there to be bytes remaining between the last byte of the last used File Entry and before the end of the Directory Block. These bytes are defined to be Unused and should be filled with 0xFF.	Unsigned Binary

(64 Bytes in fixed fields)

3.2.3 Directory to Data File Link. Each Data File on the media has a file entry within a Directory Block that describes the file, as shown in Figure B-3 and described fully in Table B-3. The field "FileStartAdd" is the logical block address of the starting location of the data contained in each file. The total number of blocks assigned for the storage of the data contained in the file is defined by the field "FileBlkCnt". File Entries are unused if the field "FileStartAdd" contains all 0xFF.This STANAG does not define the meaning of the data recorded within these Data File blocks.

File Entry								
File Name	File Start Address	File Block Count	File Size (Optional)	Create Date	Create Time	Time Type	Reserved	Vendor Unique
56	8	8	8	8	8	1	7	8
112 Byte								

Figure B-3; File Entry

Table B-3; File Entry Format

Field Name	*Bytes*	*Description*	*Data type*
Name	56	File name, see character set for restrictions. (Fill any unused FileName Byte Positions with 0x00.)	BCS
FileStartAdd	8	Zero based address of the first block reserved for data associated with this file. (Fill with 0xFF for unused directory entries.)	Unsigned Binary
FileBlkCnt	8	One based number that is the count of consecutive address blocks reserved for data for this file including the block pointed to by the FileStartAdd field. Fill with 0X00 for Deleted Entries.	Unsigned Binary
FileSize	8	The actual number of Bytes contained in this file. This file size will be equal to or less than the FileBlkCnt multiplied by the block size. This is an optional entry and will be filled with 0xFF if not used.	Unsigned Binary
Create Date	8	DDMMYYYY BCS Character values, with no embedded spaces or other formatting characters, representing the numeric date on which the file was created (e.g. BCS codes for the decimal digits 02092000 → 0x30323039 0x32303030 represents 2 September 2000). Fill with 0x2D if a value for the field is not available, or for portions of the field where data is not available.	BCS
Create Time	8	HHMMSSss Character values, with no embedded spaces or other formatting characters, representing the numeric time at which the file was created. HH is the number of the 24 hour based hour, MM is the number of minutes after the hour, SS is the number of seconds after the minute, and ss is the hundredths of seconds after the second. Fill with 0x2D if a value for the field is not available, or for portions of the field where data is not available, e.g., “ss” is not available.	BCS
Time Type	1	A numeric code that qualifies the time and date values recorded in the “Create Date” and “Create Time” fields. 0x00 = Coordinated Universal Time (Zulu) 0x01 = System Time 0x02 = Time Data Packet 0x03 – 0xFF = Reserved	Unsigned Binary
Reserved	7	Bytes in this region are reserved for future growth.	Unsigned Binary
Vendor Unique	8	Bytes in this region are available for vendors to utilize in vendor dependent ways. Use of this data is not defined in this STANAG.	Vendor Defined

(112 Bytes in fixed fields)

3.2.4 <u>File Entry Name.</u> Each entry in a directory is required to have a unique name, see character set paragraph below. Default file name is a BCS numeric value incrementally increasing, starting at value “1”.

3.2.5 File Entry Singularity. Multiple File entries are not permitted to refer to the same regions of memory, partially or completely.

3.2.6 Directory and Memory Region Relationships. File Entries shall be entered sequentially into a Directory Block as files are recorded, starting with File Entry #1 in the Primary Directory Block (logical address 1). All File Entry positions in the Primary Directory Block shall be filled before the first Secondary Directory Block is used, and so on. However, there is no a priori relationship between the memory region associated with a file entry and the place-order of the file entry within the overall directory. For example, the very first file entry could refer to the very last logical address region of memory, the second file entry could refer to the beginning logical address of memory, and so on. Similarly, there is no presumed temporal ordering of file entries—the very last entry to be inserted could be inserted in such a fashion so as to be the first entry encountered when traversing the directory chain of blocks.

3.2.7 Empty Memory Reads. Reads of regions of memory not containing Directory Blocks or Data File blocks may return unpredictable data values or result in other error conditions.

3.2.8 Contiguous Directory Entries. File entries and all fields in a directory block are contiguous .

3.2.9 Deleted Files. In some applications, previously recorded files may be deleted during the airborne mission in order to recover media space for new recordings. Deleted files shall be denoted by marking the corresponding file entry's File Block Count field with 0x00 indicating "unused". If the file block count has been set to 0x00, then other fields in that file entry are no longer meaningful.

3.2.10 Reserved Field – Reserved fields shall not be used in STANAG 4575 implementations and shall be filled with 0xFF. Reserved fields are intended for future STANAG 4575 use.

3.2.11 Number of File Entries. The numerical value placed in the "Number of File Entries" field of a Directory Block shall equal the number of active File Entries plus any File Entries marked as deleted files within that Directory Block.

3.3 Data Definitions.

3.3.1 Byte Order. The structures described in this standard are defined to have the following bit and Byte orientation. The most significant byte of any multi-byte structure is byte 0. The most significant bit of each byte is bit 0. This ordering is commonly referred to as "Big Endian". This ordering is illustrated in Figure B-4 below. The byte order of the

data stored on the media is not to be altered by the recording system and is not defined here.

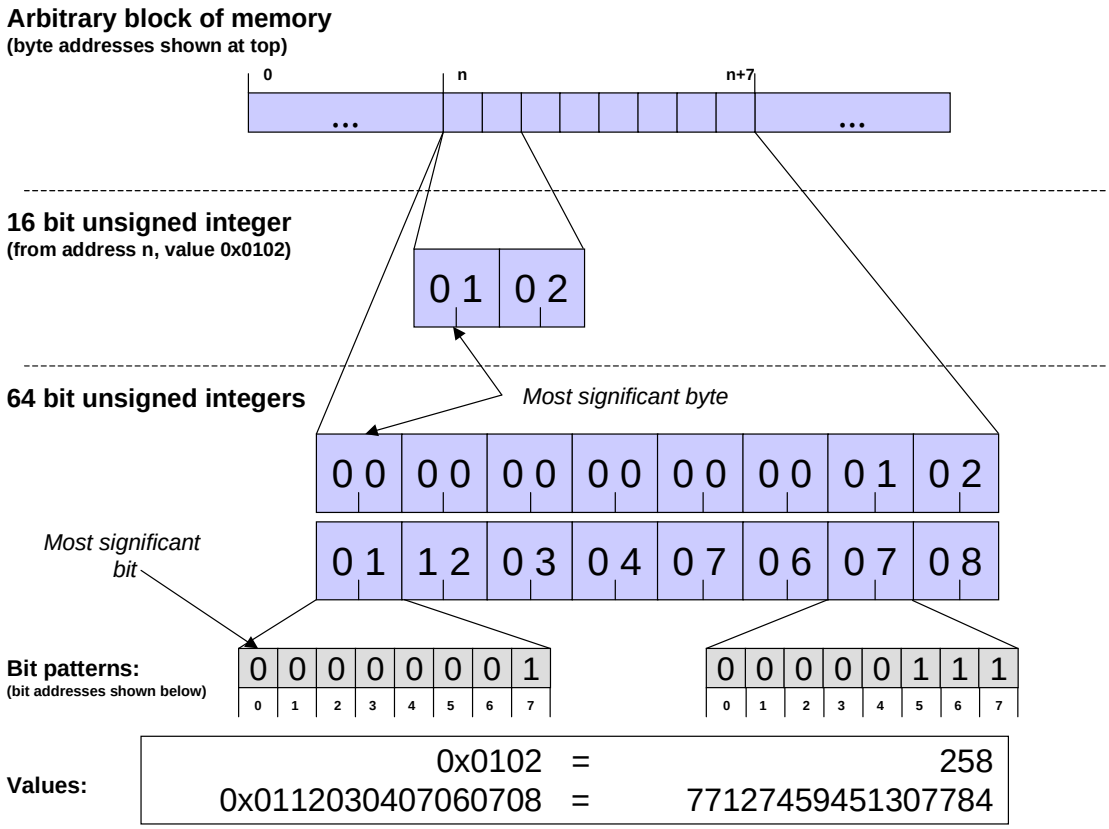

Figure B-4; Byte Order

3.3.2 Character Set. The character set for all character fields is based on ISO/IEC 10646-1, the Universal Multiple-Octet Coded Character Set (UCS). The NIIA limits characters to a subset rather than allow all characters. The subset will be single octets, known as the Basic Character Set (BCS).

3.3.3 Naming restrictions. The following rules shall be applied when forming names in order to assure the highest degree of interchange among other operating systems.

3.3.3.1 Characters. Characters from the first 127 common BCS characters (0x00 through 0x7E) may be used in names except for specific prohibited characters.

Any BCS character code value smaller than 0x20 is prohibited, except where the 0x00 is used to terminate the name.

The other prohibited characters with their hexadecimal representation are defined in Table B-4.

Table B-4; Prohibited Characters Hexadecimal Representation

Forbidden Characters in Names	*Hexadecimal Value*	*Forbidden Characters in Names*	*Hexadecimal Value*
”	0x22	=	0x3D
‘	0x27	>	0x3E
*	0x2A	?	0x3F
/	0x2F	\	0x5C
:	0x3A	]	0x5D
;	0x3B	[	0x5B
<	0x3C	|	0x7C

3.3.3.2 <u>Names.</u> Names used for this interface will follow the following rules.

Upper and lowercase characters are considered to be different within file names.

Leading and trailing spaces are not permitted.

Leading periods are not permitted.

Names shall fill their field starting with byte 0 per paragraph 3.3.1 and are terminated with a 0x00. Unused Name characters shall be filled with 0x00. Names may utilise the full length of the field, in which case the terminating 0x00 must be omitted. Examples of host provided and default file names are shown in Figure B-5.

File Name Byte Address

0	1	2	3	4	5	6	7	8	9	10	11	12	13	14	15	16	17	18		50	51	52	53	54	55
Host Provided File Name Example																									
R	E	C	O	R	D	I	N	G	1	S	E	N	S	O	R	2	0X 00	0X 00		0X 00	0X 00	0X 00	0X 00	0X 00	0X 00
Default File Name Example																									
0	0	0	0	0	0	0	0	0	0	0	0	0	0	0	0	0	0	0	0	0	0	0	0	0	1

Figure B-5; File Name Examples

PHYSICAL AND POWER INTERFACE DEFINITION

1. Introduction. The purpose of this Annex of STANAG 4575 is to define the physical, electrical data/control, and power interface as well as the connector specifications for the STANAG 4575 compliant Removable Memory Module. This is intended to facilitate interoperability between various types of RMM's and NATO ground processing systems. Refer to Figure C-1 for a notional system block diagram.

2. Physical Interface. The data recorder shall have a removable memory module (RMM) as defined in Annex A. The RMM shall incorporate the complete NADS Interface.

3. Interface Connectors. The STANAG interface supports two different connector implementations. A D-sub military connector is provided for implementations with minimum space provisions. This class of connectors is defined in MIL-DTL-24308. This connector is relatively small and takes little room inside the housing. Two circular military connectors are specified for applications that require the environmental capabilities of this class of connector. The two connectors separate the data from the power provisions. These connectors are defined in MIL-DTL-38999. STANAG compliant ground stations shall have mating connectors for both connector options. As defined in Section 2 of Annex B of STANAG 4575, the specified Data and Control Interface for both configurations of the download port shall be a Fibre Channel interface utilizing a twin-axial copper pair with a differential impedance of 150 ohms as per the Fibre Channel standard.

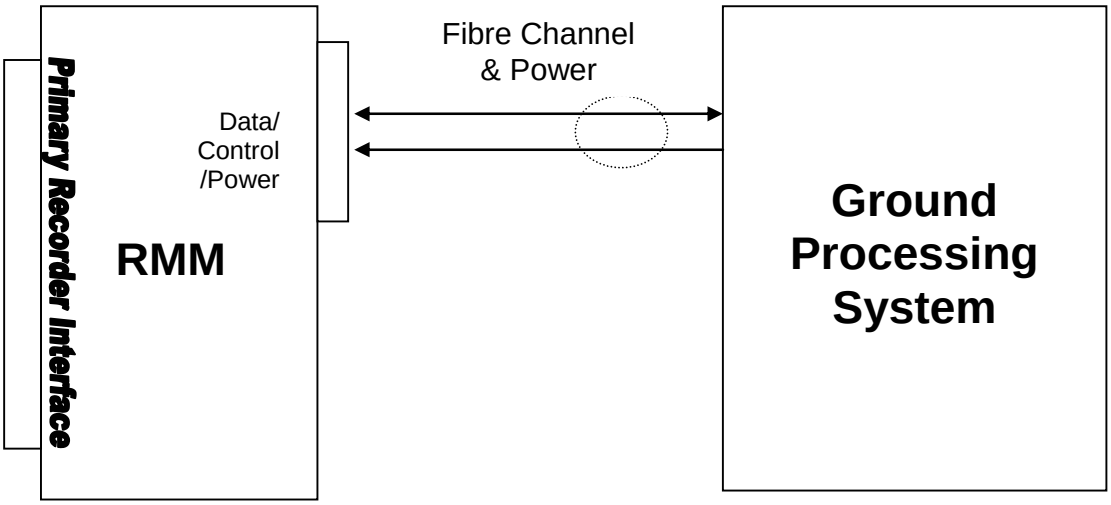

Figure C-1
Notional Block Diagram

3.1 D-sub Military Connector. A 50 contact male D-sub (pin contacts), Amp P/N 746790-1 or equivalent, shall be utilized on the RMM for this interface. In applications requiring a positive locking mechanism, a Positronic Corporation 50 contact male D-sub connector, part number HDC50M32S0V30 (non-hermetic), SAVAC50M (hermetic), or equivalent shall be utilized. The mating cable shall utilize a 50 contact female D-sub connector, Amp P/N M24308/2-346F (solder) or T&B P/N 622-50S (mass terminated) or equivalent, with the Positronic Corporation 50 contact female D-sub connector with quick release locking mechanism and EMI backshell, part number RD50F10GVL0 (non-hermetic), SAVAC50F (hermetic), or equivalent for the applications requiring a positive locking mechanism. In no case shall a connector use fittings that would preclude mating with the positive locking mechanism defined above.

3.2 Circular Military Connector. Two connectors are used in this configuration, one for the data, and one to provide power. A chassis mount connector, part number W.L. Gore & Associates, Inc. FCN 1058 or FCN 1060, or equivalent, shall be utilized for the data in this configuration of the interface. The mating cable shall utilize the Gore Co. FCN 1059 connector or equivalent. A chassis mount connector, part number MIL-DTL-38999/20WD35SN, or equivalent, shall be used for the power in this configuration of the interface. The mating cable shall utilize the MIL-DTL-38999/26WD35PN connector, or equivalent.

4. Power Input Interface. The Power Interface for the STANAG 4575 port shall be implemented for each of the connector configurations. The power pin definitions are specified in Table C-2 or C-4 in section 5, depending on the connector chosen.

In scenarios involving removal of the Removable Memory Module (RMM) from the aircraft and transportation to a ground facility to process the collected mission data, the RMM shall be powered through the STANAG 4575 power interface that is defined below. In scenarios where the RMM remains on the aircraft, mounted within its native Interface Unit (IU), the RMM shall be powered via aircraft power only, using the recorder's native power supply located within its IU. Note that this standard does not define or require RMM power protection logic for the potentially damaging case of both aircraft and STANAG power being simultaneously applied to the RMM. For STANAG 4575 implementations, when providing download while the RMM is located in the aircraft, provisions shall be made within the ground equipment to preclude simultaneous application of power from both the aircraft and the STANAG 4575 interface.

The required voltages and currents are specified in Table C-1 for each connector configuration. Power supply regulation shall be +/- 5% for 3.3, 5.0, and 12 VDC, and +/- 10% for 28 VDC under full load conditions. Output noise and ripple on the +3.3V, +5.0V and +12.0V power supplies shall be rated at 2% or less of the regulated output voltage under full load conditions. The power supply outputs shall be internally protected against short circuit loads and against over-voltage conditions with adjustable or preset crowbar limits of nominally 110% of the regulated output voltage.

Table C-1; Memory Unit Maximum Power Requirements	
Voltage	*Current*
3.3 VDC	15 A
5 VDC	10 A
12 VDC	13.5A
28 VDC	5 A

A controlled power initialization sequence is required from the external power supplies. The power supply overshoot during the power ON transition should not exceed 5 seconds and should be no more than 50 millivolts for the +3.3V, +5.0V and +12.0V voltages. An overshoot of up to 500 millivolts is acceptable on the +28V voltage. The power supplies should power ON with controlled rate, monotonically increasing output voltages with the following characteristics:

Turn ON time (0V to regulated output voltage; no load): $\geq$ 0.5 mS (minimum)
Turn ON time (0V to regulated output voltage; full load): $\leq$ 5.0 mS (maximum)
Turn ON Voltage Overshoot (no load to full load): $\leq$ 50mV (maximum) for 3.3, 5.0, and 12 VDC, and $\leq$ 500mV (maximum) for 28 VDC.

In order to insure that power is not applied until the Power Interface connector is fully and properly mated, a Safety Interlock shall be utilized. The 2 Safety Interlock contacts shall be internally shorted within the RMM thus providing a continuous electrical path between the Safety Interlock contacts on the mating connector when seated. The ground station power supply shall detect a continuous short circuit across the RMM Safety Interlock leads for a minimum of five seconds before outputting the specified voltages. Any loss of interlock continuity must restart the 5-second time interval. Should interlock continuity be lost after power has been applied to the RMM, power should be automatically disabled immediately and only re-enabled following 5 continuous seconds of continuity. Implementing this interlock will require logic within the power supply system that is separately powered.

The STANAG 4575 power cable is expected to produce voltage drops in both the voltage and return wires. To offset these losses the NADSI power connectors must provide remote sense pins for the +3.3V, +5.0V and +12.0V voltages and their returns. The power supplies must be capable of offsetting those wiring voltage losses. The maximum length of the power cables for all implementations of the NADSI interconnection cables shall not exceed 3 meters, including connectors.

5. Ground Station Environment Requirements. The ground station shall provide a flat surface of a minimum size of 18”w by 18”d by 12”h and support a minimum of 43 pounds (19.5 kg) for the RMM while it is being downloaded. This flat surface can be a shelf or bench or other suitable work surface, such that the RMM will be stable and the connecting cable(s) will not be snagged or damaged during normal operation. The flat surface shall be capable of +100 degrees Celsius on the contact

surface. The RMM will not require special cooling provisions. Ambient air within the ground station shall be within the range of -20 to +50 degrees Celsius, non-condensing. The RMM has to be in an open air with minimum 3 inches clearance from any object on its sides or top. Any hot surfaces on the RMM shall be marked in accordance with proper safety guidelines.

Advisory Note: The ground station will provide an environment that allows for normal operation of the RMM while removed from its host environment. Any vibration, shock, or environmental influences that are beyond those that are commonly experienced by ground station computer equipment are to be avoided during RMM operation.

6. Connector Pin Connections. The specific connectors, as defined in section 2, above, shall be wired using the following pin connections. Note that the figures shown are notional and are not to scale.

6.1 D-sub Pin Connections. The 50-pin D-sub connector shall be wired in accordance with Table C-2 and as shown in Figure C-2. The Ground Processing System is required to supply the noted voltages, signals, and ground connections. The RMM is not required to utilize all of these connections. Ground Processing Systems should not make any connection via a STANAG 4575 compliant cable to any of the pins identified as "Reserved for Vendor". Ground Processing Systems may make connections to these other pins through vendor specific interface assemblies. Implementers are cautioned to take steps to preclude the possibility of a vendor specific interface assembly being mated with a generic NADSI interface. An overall shield connected to the chassis at each end and circumferentially bonded to the subminiature D connectors is permitted and is likely to be required in order to meet local EMI/RFI requirements. Shielding and grounding configurations associated with the Fibre Channel signals must be designed to maintain these signals in compliance with the Fibre Channel standards.

Table C-2; D-sub Pin Connections on the RMM					
Pin	*Function*	*Pin*	*Function*	*Pin*	*Function*
1	+12 volts DC	18	+12 volts DC	34	- Interlock
2	+12 volts DC	19	+12 VDC Return	35	+12 VDC Sense
3	FC Shield	20	+12 VDC Return	36	+12 VDC Return Sense
4	R+	21	+12 VDC Return	37	Reserved for Vendor
5	R-	22	+5 volts DC	38	+ 5 VDC Sense
6	FC Shield	23	+5 volts DC	39	+5 VDC Return Sense
7	Reserved for Vendor	24	+5 VDC Return	40	Reserved for Vendor
8	Reserved for Vendor	25	+5 VDC Return	41	+28 VDC
9	FC Shield	26	+5 VDC Return	42	+28 VDC Return
10	T+	27	+3.3 VDC Return	43	Over-braid Shield
11	T-	28	+3.3 VDC Return	44	Reserved for Vendor
12	FC Shield	29	+3.3 VDC Return	45	Reserved for Vendor
13	Reserved for Vendor	30	+3.3 VDC Return	46	Reserved for Vendor
14	Reserved for Vendor	31	+3.3 VDC	47	Reserved for Vendor
15	FC Shield	32	+3.3 VDC	48	+3.3 VDC Sense
16	+3.3 volts DC	33	+3.3 VDC	49	+3.3 VDC Return Sense
17	+5 volts DC			50	+ Interlock

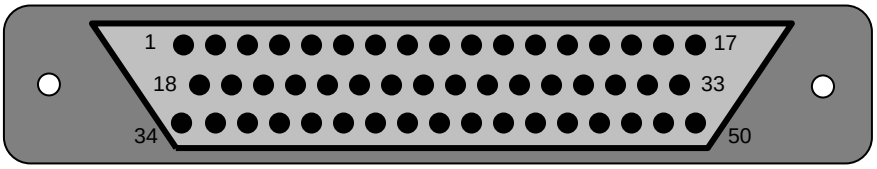

Figure C-2; D-sub Pin Configuration

6.2 Circular Pin Connections. The circular data connector shall be wired in accordance with Table C-3 and as shown in Figure C-3. The circular power connector shall be wired in accordance with Table C-4 and as shown in Figure C-4. Shielding and grounding configurations are through the connector shell for the data connector and through both the connector shell and the designated pin for the power connector.

Table C-3; Data/Control Circular Military Connector	
Pin	*Signal*
1	R-
2	T-
3	R+
4	T+

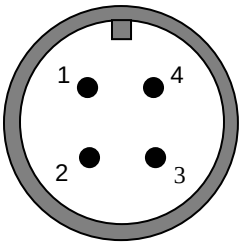

1 – R-
2 – T-
3 – R+
4 – T+

Figure C-3; Circular Data Connector

Note: Figure C-3 is a front view of the connector looking into the RMM.

Table C-4; Circular Power Connections					
Pin	*Function*	*Pin*	*Function*	*Pin*	*Function*
1	+ 3.3 VDC	19	3.3 V DC Return	31	12 VDC Return
2	+ 3.3 VDC	20	3.3 V DC Return	32	3.3 VDC Return
3	+ 3.3 VDC	21	3.3 V DC Return	33	5.0 VDC Return
4	+ 3.3 VDC Sense	22	3.3 V DC Return Sense	34	5.0 VDC Return
5	+ 3.3 VDC	23	5.0 V DC Return Sense	35	28 V DC Return
6	+ 5.0 VDC	24	5.0 V DC Return	36	+ 12.0 VDC
7	+ Interlock	25	5.0 V DC Return		
8	+ 5.0 VDC Sense	26	12 V DC Return		
9	+ 5.0 VDC	27	12 V DC Return		
10	+ 5.0 VDC	28	12 V DC Return		
11	+ 5.0 VDC	29	12 V DC Return Sense		
12	+ 12.0 VDC	30	3.3 VDC Return	37	+ 28 VDC
13	+ 12.0 VDC				
14	+ 12.0 VDC				
15	+ 12.0 VDC Sense				
16	- Interlock				
17	Chassis/Cable Ground				
18	+ 3.3 VDC				

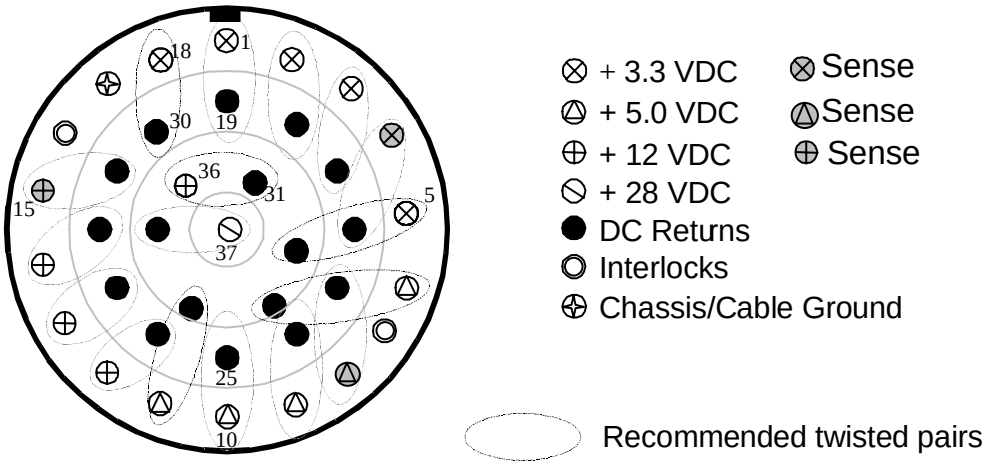

Figure C-4; Circular Power Connector

Note: Figure C-4 is a front view of the connector looking into the RMM.